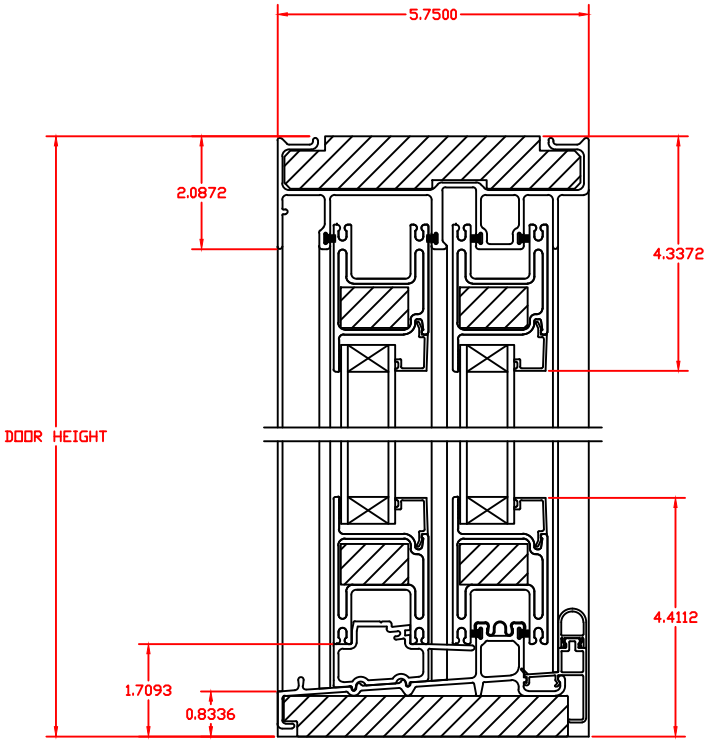

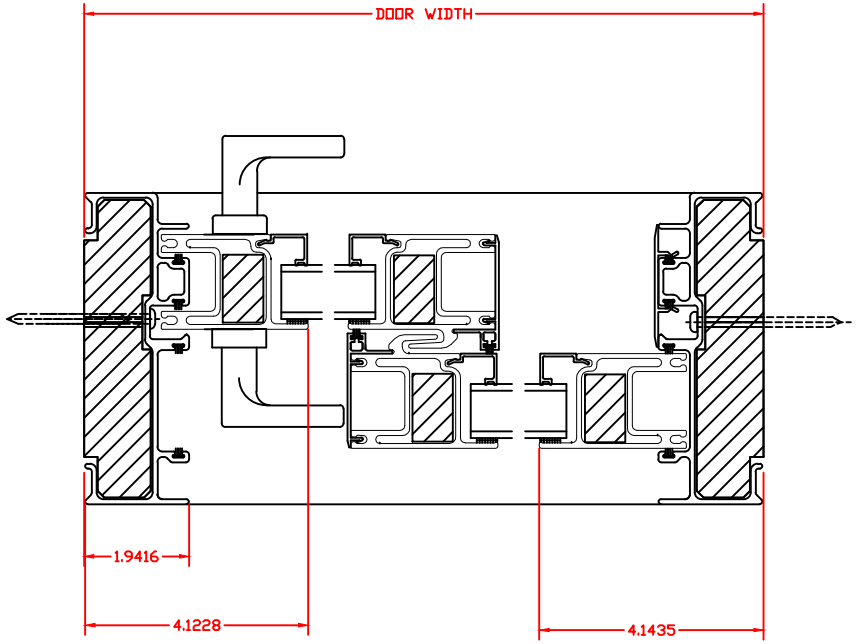

EnerLux WINDOWS & DOORS

EnerLux Windows & Doors
1331 Park Avenue
Omaha, NE 68105
402-205-3655

Design concepts and information may not be reproduced, used or disclosed without written permission from EnerLux Windows & Door.

Scale:	Full
Date:	10/5/22
Drawn By:	AJL
	5000 Sliding Door Cross Sections