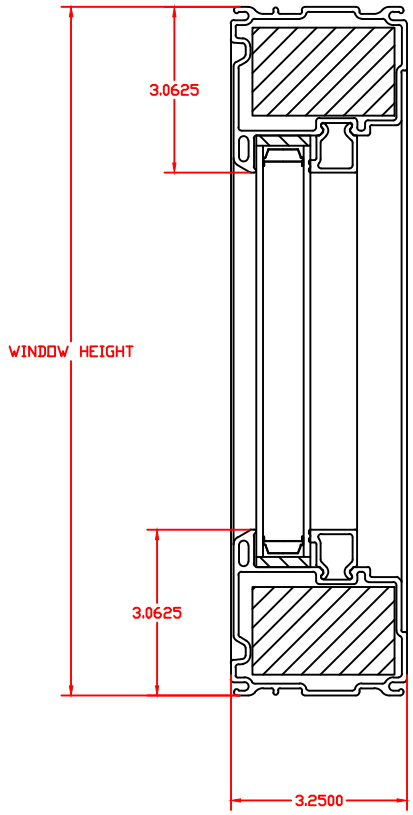


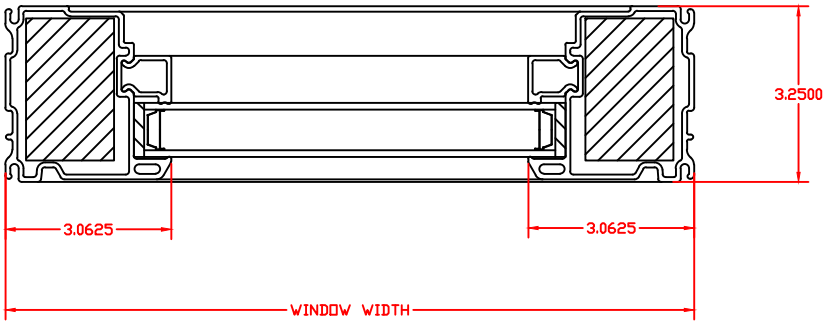


EnerLux WINDOWS & DOORS

EnerLux Windows & Doors
1331 Park Avenue
Omaha, NE 68105
402-205-3655

Design concepts and information may not be reproduced, used or disclosed without written permission from EnerLux Windows & Door.

| | |
|---|---|
| Scale: | Full |
| Date: | 10/5/22 |
| Drawn By: | AJL |

2100 Fixed Casement Cross Sections