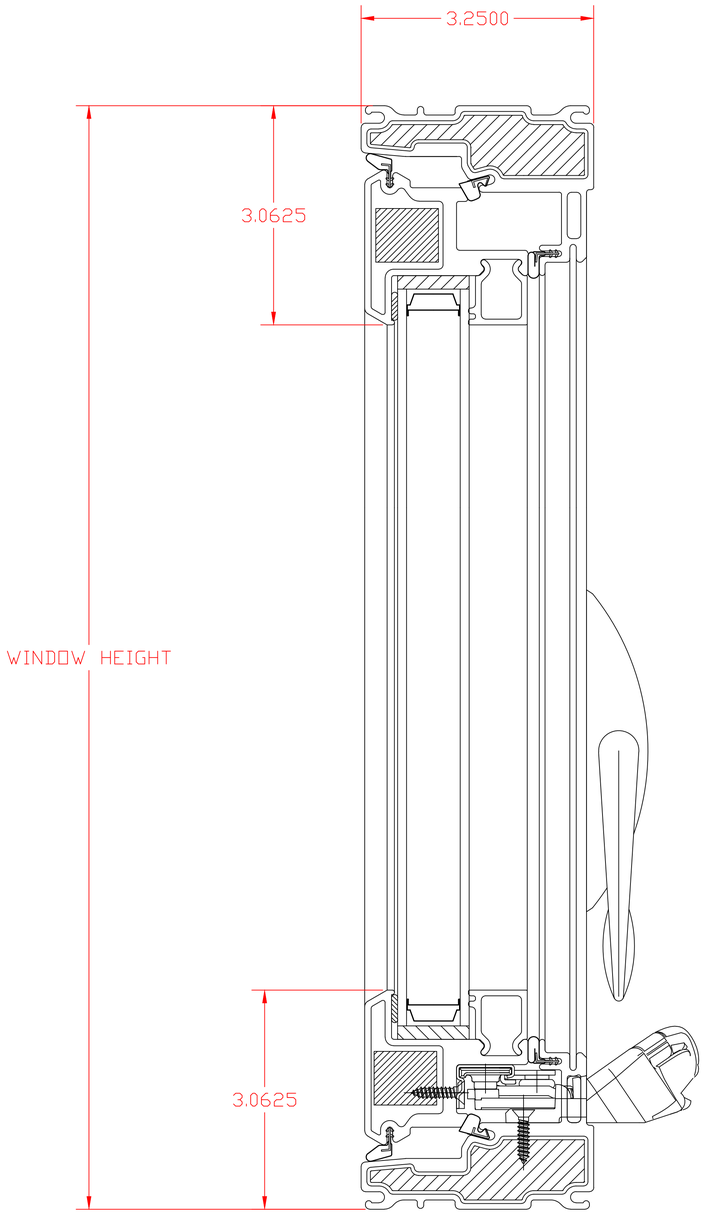

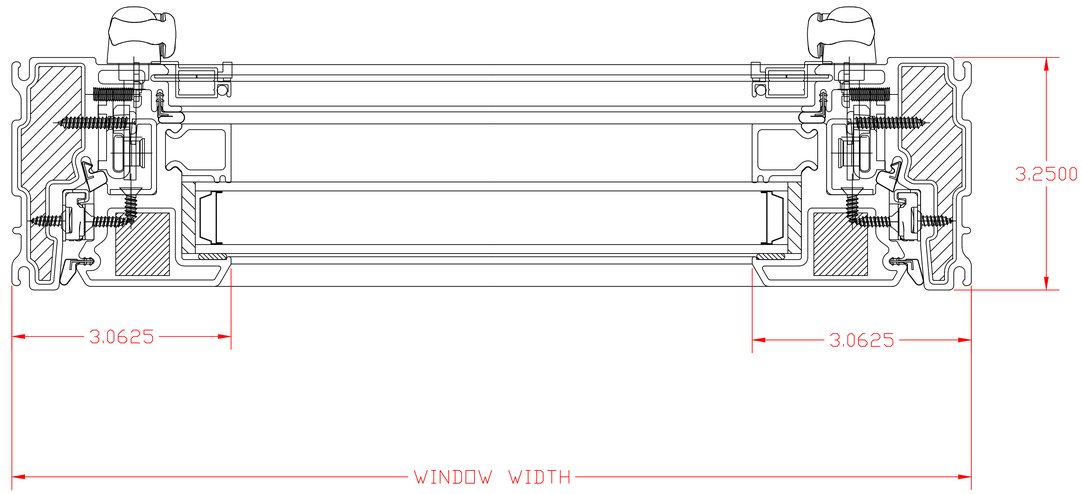

EnerLux WINDOWS & DOORS

EnerLux Windows & Doors
1331 Park Avenue
Omaha, NE 68105
402-205-3055

Design concepts and information may not be reproduced, used or disclosed without written permission from EnerLux Windows & Door.

Scale:	Full
Date:	7/15/13
Drawn By:	AJL

2100 Awning Cross Sections